LED JNR FLOODLIGHT 10W

LED JNR FLOODLIGHT SERIES

4000K or 5000K Colour Temperature

3 year Warranty

IP65 Rated

IK08 Rated

FEATURES

- Ultra efficient system efficacy of 120lm/W
- Ultra-thin streamline body
- High quality Philips Lumileds LED chips
- 36,500 hours to L70
- Corrosion resistant aluminium body
- Replaces a 100W Halogen Floodlight

LIGHTING DATA

LIGHT SOURCE	Lumileds 3030 2D
LUMEN OUTPUT	1,205lm
LUMINAIRE EFFICACY	120lm/W
LIFETIME @L70	>36,500hrs
CCT	4000K (CW) or 5000K (NW)
CRI	>75
BEAM ANGLE	110°

ELECTRICAL DATA

POWER SUPPLY	Sosen LED Driver
SYSTEM WATTAGE	10w
MAINS VOLTAGE	AC100-277V / 50-60 Hz
POWER FACTOR	>0.90
THD	<20%
CONNECTION	1.2m 3 core cable

DESIGN / CONSTRUCTION

BODY MATERIAL	Aluminium
LENS MATERIAL	Toughened Glass
REFLECTOR MATERIAL	Polished Aluminium
BRACKET MATERIAL	Iron
COATING	Polyester powder coated black
MAINTENANCE	Regular cleaning of surfaces
WEIGHT	0.55kg

CODE 4000K	EVFL10CW
CODE 5000K	EVFL10NW

TECHNICAL DATA

IP RATING	IP65
IK RATING	IK08
OPERATING TEMP	-20° to + 45°C
PROTECTION CLASS	Class 1
CERTIFICATIONS	SAA
WARRANTY	Standard 3 year warranty

LED JNR FLOODLIGHT 10W

LED JNR FLOODLIGHT SERIES

DIMENSIONS

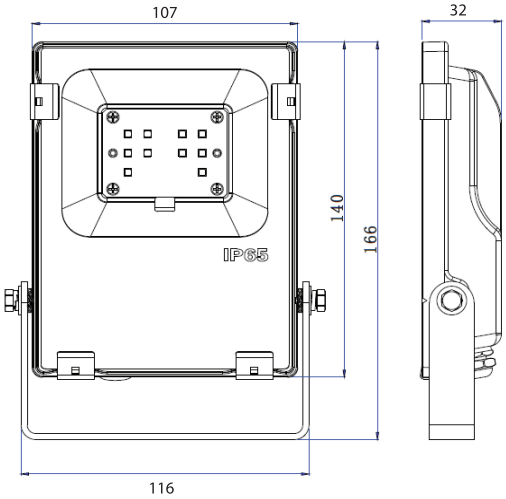

PHOTOMETRIC DIAGRAM

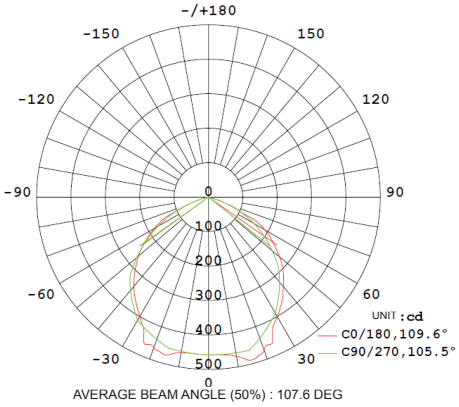

IMAGES

EVOLVE LIGHTING

Phone: 0800 357 6311 E: sales@evolve-lighting.co.nz
A: PO Box 693, 59A Taupo Quay, Wanganui

WWW.EVOLVE-LIGHTING.CO.NZ