SOSEN
LED DRIVER

SOSEN LED Driver, Your Smart Choice

Specifications

SS-150CP Series LED Driver

Model: SS-150CP-54*

Description: 150W LED Driver

Rev.: V00

Release Date: 2018-10-18

SS-150CP Series LED Driver

SOSEN
LED DRIVER

LED DRIVER
—
CP Series

Features:

- Efficiency up to 93%
- Isolated dimming:0-10V,PWM,Resistor
- IP65
- Protections: SCP/OTP/OVP/OPP
- Surge protection: L/N-PE: 4kV, L-N: 4kV
- Warranty: 5 years

E360758

IP65

Description:

SS-150CP is belong to CP series round shape constant current led power supply, suitable for both indoor and outdoor led lighting application. Integrated with surge circuit; Over voltage protection function for input,can control the max output power automatically.With OTP function and can ensure that the lights will not off during the protected time; With Isolated dimming; With aluminum casing and 100% heat spread glue to ensure the heat spread function and waterproof function; With high reliability and high cost efficiency features.

Model List:

Model	AC Input Range	Max. Pout	Vout Range	Full Power Vo Range	Iout	THD(Typ.)	PF(Typ.)	Eff.(Typ.)	Max.Tc
SS-150CP-54*	108-305Vac	150W	28-54V	36-54V	2.1-4.2A	7%	0.97	93%	85℃

1.Default tested at 220Vac, full load, Ta 25℃。

2.“*”Optional B or space in the place of * means additional function.

- Space is the base model without any optional function;
- Suffix B for model with 3-in-1 dimming (0-10V, PWM, Resistor);

SHENZHEN SOSEN
ELECTRONICS CO.,LTD

: A3 Building,Gonghe Fourth Industrial Area, Shajing Street, Bao'an District, Shenzhen, China 518104

: 86-755-29358800

: 86-755-29358816

: info@szsosen.com

: www.szsosen.com

Input Characteristics:

Parameter	Min.	Typ.	Max.	Remark
Rated AC Input Range	120Vac		277Vac	
AC Input Range	108Vac		305Vac	
Input Frequency Range	47Hz	50/60Hz	63Hz	
Max Input Current			1.7A	108Vac, Full load
Max Input Power			170W	108Vac, Full load
Max Inrush Current(120Vac)			50A	Cold start
Max Inrush Current(220Vac)			95A	Cold start
Max Inrush Current(277Vac)			125A	Cold start
No Load Power			10W	220Vac/50Hz, No load
Power Factor	0.95	0.98		220Vac/50Hz, Full load
	0.90			100-277Vac/50Hz, 70-100% load
THD		7%	13%	220Vac/50Hz, Full load
			17%	100-277Vac/50Hz, 70-100% load

SHENZHEN SOSEN
ELECTRONICS CO.,LTD

: A3 Building,Gonghe Fourth Industrial Area, Shajing Street, Bao'an District, Shenzhen, China 518104

: 86-755-29358800

: 86-755-29358816

: info@szsosen.com

: www.szsosen.com

Output Characteristics:

Parameter	Min.	Typ.	Max.	Remark
Output Voltage Range	28V		54V	Power derated @28-36V
Rated Output Voltage	36V		54V	Po=Vo*Io=150W, Full load
Rated Output Current	2.8A		4.2A	4.2A for 36V,2.8A for 54V
Current Adjustable Range(AOC)	2.1A		4.2A	
No Load Voltage			60V	
Efficiency @120Vac	90.0%	91.5%		Output 43V/3.5A
Efficiency @220Vac	91.0%	93.0%		Output 43V/3.5A
Efficiency @277Vac	91.0%	93.0%		Output 43V/3.5A
Output Current Tolerance	-5%		+5%	
Output Current Ripple(PK-AV)		5%	10%	
Start-up Current Overshoot			10%	Full load
Start-up Time			0.5S	120Vac
			0.5S	220Vac
Line Regulation	-2%		+2%	Full load
Load Regulation	-2%		+2%	
Temperature Coefficient	-0.03%/℃		+0.03%/℃	Tc:0℃~85℃
OTP	80℃	85℃	90℃	Tc, Decreases output current, returning to normal after over temperature is removed.
Short Circuit Protection			10W	Driver will not be damaged, Hiccup mode

SHENZHEN SOSEN
ELECTRONICS CO.,LTD

: A3 Building,Gonghe Fourth Industrial Area, Shajing Street, Bao'an District, Shenzhen, China 518104

: 86-755-29358800

: 86-755-29358816

: info@szsosen.com

: www.szsosen.com

Other Characteristics:

Parameter		Min.	Typ.	Max.	Remark
0-10V Dimming (Optional)	Dim Vmax	0V		12V	
	Dim Range	10%Iomax		100%Ioset	
	Rec.Dim Range	1V		10V	
PWM Dimming (Optional)	PWM High	9.8V		10.2V	
	PWM Low	0V		0.3V	
	Frequency	1KHz		2KHz	
	PWM Duty	10%		100%	
Resistor Dimming (Optional)	Resistance	10Kohm		100Kohm	
	Dim Range	10%Iomax		100%Ioset	
Lifetime(Tc≤65℃)		100,000 hours			
Lifetime(Tc≤75℃)		50,000 hours			
MTBF		221,000 hours			220Vac,Full load, Ta=25℃ (MIL-HDBK-217F)
IP Grade		IP65			
Tc		85℃			
Warranty		5 years			Tc : 75℃
Net Weight		1500g			
Dimension		Φ151mm*71mm			D x H

NOTE: All the parameters above are tested Ta 25℃, unless specified.

SHENZHEN SOSEN ELECTRONICS CO.,LTD

: A3 Building,Gonghe Fourth Industrial Area, Shajing Street, Bao'an District, Shenzhen, China 518104

: 86-755-29358800

: 86-755-29358816

: info@szsosen.com

: www.szsosen.com

SS-150CP Series LED Driver

Environmental Requirements

Parameter	Min.	Typ.	Max.	Remark
Operating Temperature(Tcase)	-40℃	25℃	+85℃	
Storage Temperature	-40℃	25℃	+85℃	
Operation Humidity	10%RH		90%RH	
Storage Humidity	5%RH		95%RH	
Altitude	-65m		4000m	

Safety and EMI/EMS Standards

Certification	Standard	Status	Remark
UL/cUL	UL8750	✓	
TUV	EN 61347-2-13:2014 EN61347-1:2008+A1:2011+A2:2013 EN62493:2015	✓	
RCM	AS/NZS61347.2.13	✓	
BIS	IS15885:2012 Part 2 Sec 13		
CCC	GB 19510.14-2009	✓	
CE	EN 61347-2-13:2014 EN61347-1:2008+A1:2011+A2:2013	✓	

EMI/EMS	Criterion	Remark
Conduction Emission	EN55015:2013+A1:2015	
Radiation Emission	EN55015:2013+A1:2015	
Harmonic Current Emissions	IEC/EN 61000-3-2	Class C
Surge	IEC/EN61000-4-5	Difference mode 4kV, Common mode 4kV,Criterion B
Ring Wave	IEC/EN 61000-4-12	Difference mode 6kV, Common mode 6kV,Criterion B

SHENZHEN SOSEN
ELECTRONICS CO.,LTD

: A3 Building,Gonghe Fourth Industrial Area, Shajing Street, Bao'an District, Shenzhen, China 518104

: 86-755-29358800

: 86-755-29358816

: info@szsosen.com

: www.szsosen.com

SS-150CP Series LED Driver

Safety Test Items:

Safety test items	Technical Indicators			Remark
Insulation Requirements	UL Insulation Requirements	TUV Insulation Requirements	CCC Insulation Requirements	
Input-Output	1600Vac	3000Vac	3750Vac	Reinforced insulation
Input-Case	1600Vac	1500Vac	1875Vac	Basic insulation
Input-Dim	1600Vac	3000Vac	3750Vac	Reinforced insulation
Output-Dim	1600Vac	1000Vac	1000Vac	Additional insulation
Output-Case	500Vac	1000Vac	1000Vac	Function insulation
Dim-Case	500Vac	250Vac	250Vac	
Insulation Resistance	≥10MΩ			Input-Output,Test voltage:500Vdc
Ground Resistance	≤0.1Ω			25A/1min
Leak Current	≤0.75mA			277Vac

NOTE:

1. SOSEN warrants the LED Driver itself meets with EMC standard. However, LED Driver's EMC should be re-checked when integrated into lighting systems due to unexpected interference as component.
2. Please short Line and Neutral, LED+ and LED-, Dim+ and Dim - when Hi-pot test.
3. The CCC withstand voltage test needs to disconnect the built-in lightning protection tube. According to the IEC 60598-1:14 standard section 10.2, the "built-in lightning protection tube" can be marked on the nameplate to disconnect the discharge tube on testing.

Performance Curves:

Input Inrush Current

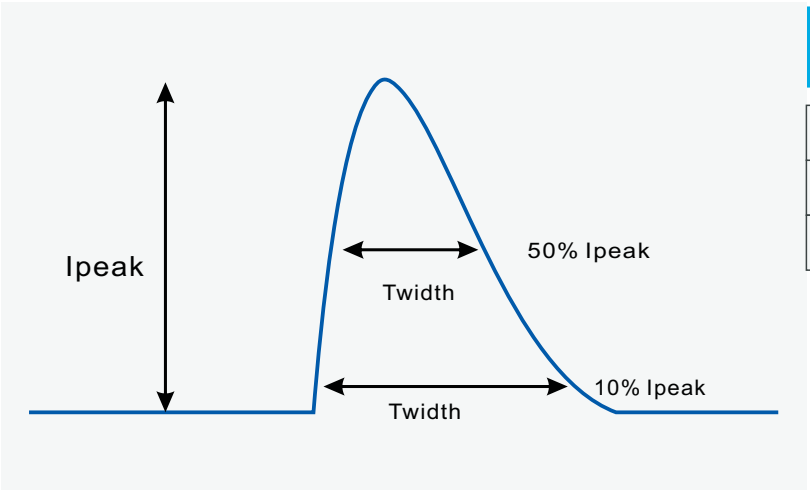

Vin	Ipeak	T(@10% of Ipeak)	T(@50% of Ipeak)
120Vac	50A	600uS	
220Vac	95A		200uS
277Vac	125A	500uS	

SHENZHEN SOSEN ELECTRONICS CO.,LTD

: A3 Building,Gonghe Fourth Industrial Area, Shajing Street, Bao'an District, Shenzhen, China 518104

: 86-755-29358800

: 86-755-29358816

: info@szsosen.com

: www.szsosen.com

Performance Curves:

Output Voltage Vs. Output Current(Dim/AOC Window)

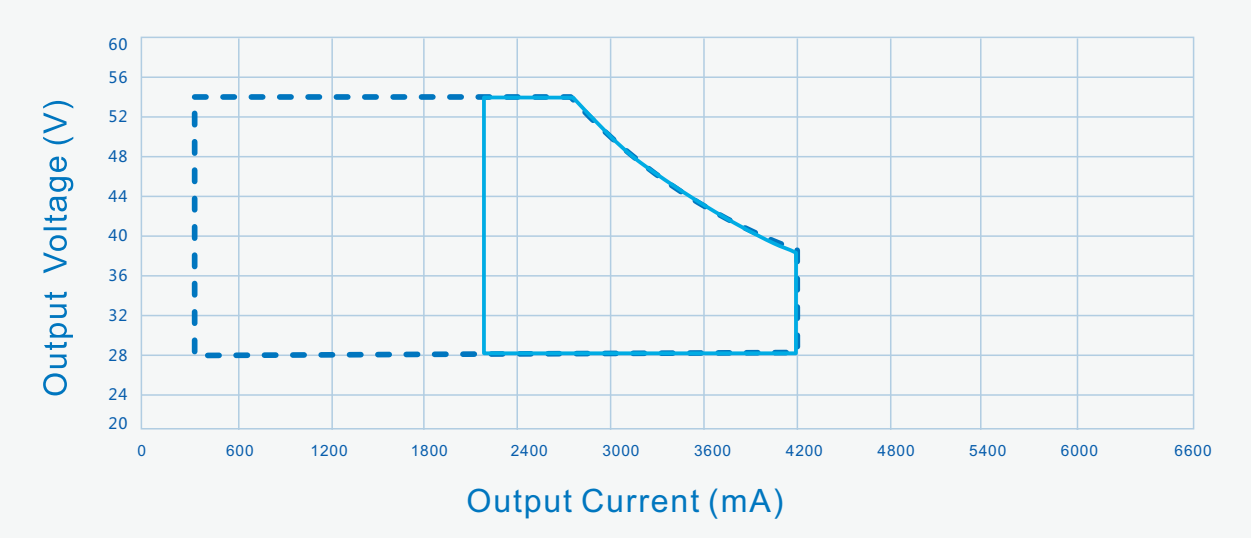

Diming Window AOC Window

Efficiency Vs. Output Voltage (Vin=120Vac)

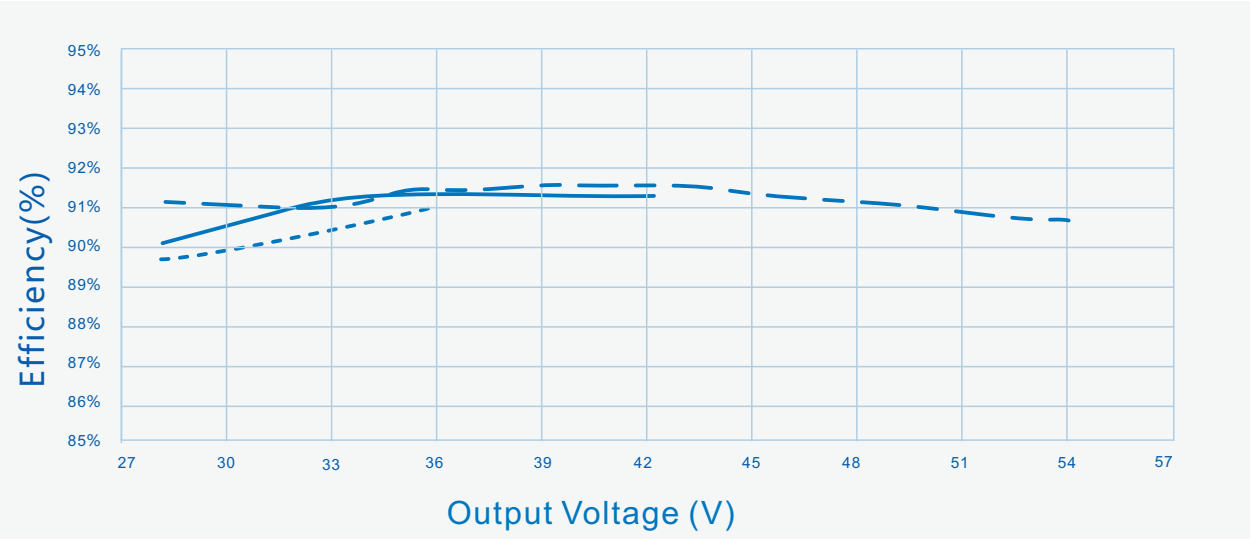

Io=4200mA Io=3500mA Io=2800mA

SHENZHEN SOSEN
ELECTRONICS CO.,LTD

: A3 Building,Gonghe Fourth Industrial Area, Shajing Street, Bao'an District, Shenzhen, China 518104

: 86-755-29358800

: 86-755-29358816

: info@szsosen.com

: www.szsosen.com

Performance Curves:

Efficiency Vs. Output Voltage (Vin=220Vac)

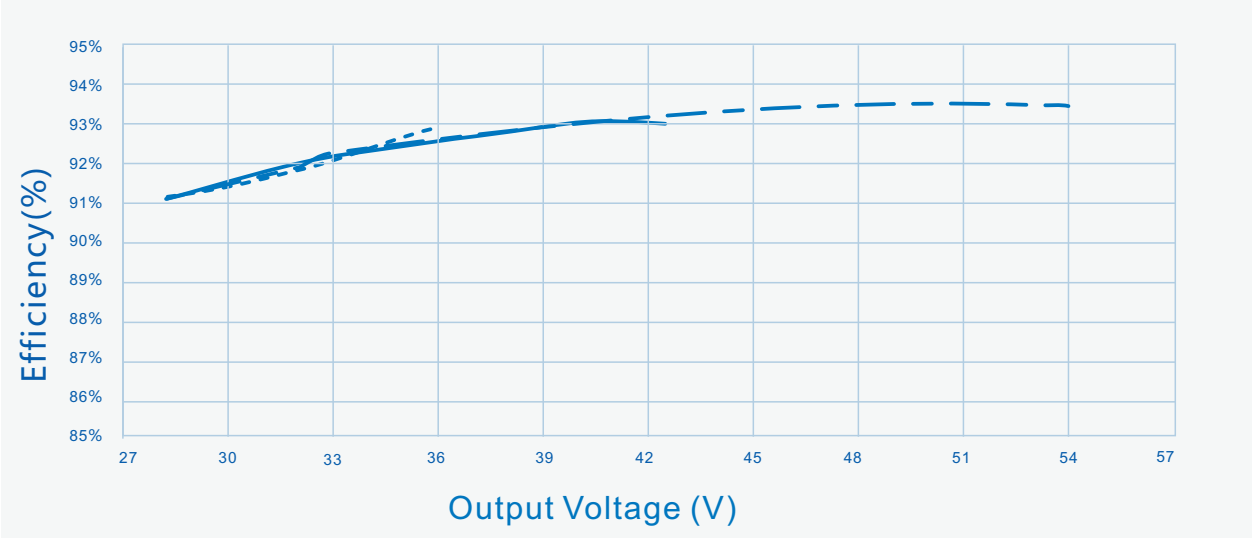

Io=4200mA Io=3500mA Io=2800mA

Efficiency Vs. Output Voltage (Vin=277Vac)

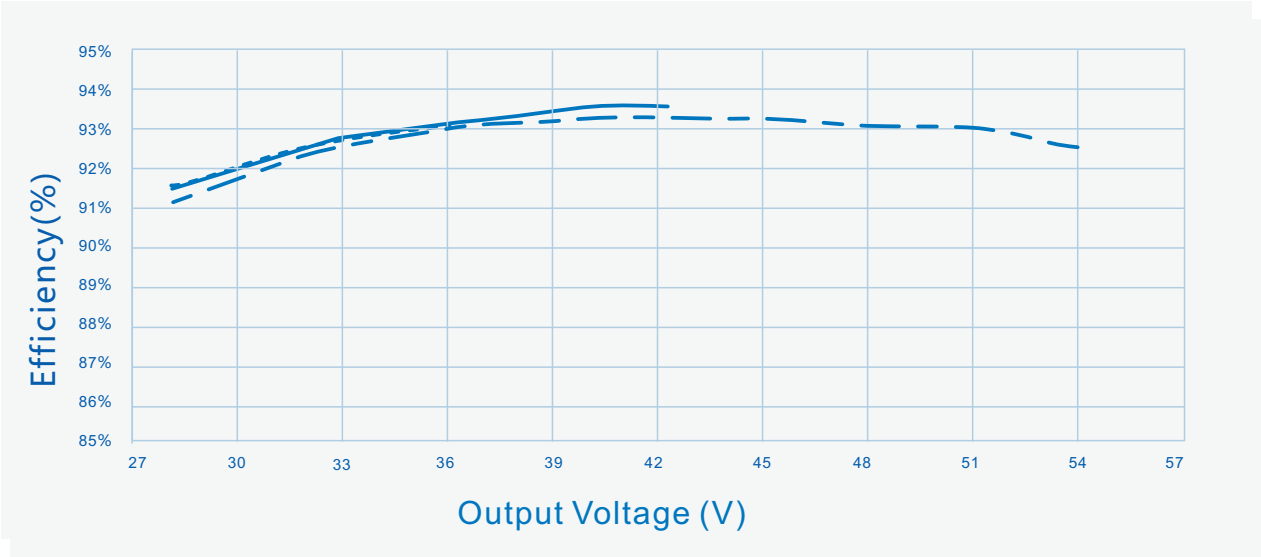

Io=4200mA Io=3500mA Io=2800mA

SHENZHEN SOSEN
ELECTRONICS CO.,LTD

: A3 Building,Gonghe Fourth Industrial Area, Shajing Street, Bao'an District, Shenzhen, China 518104

: 86-755-29358800

: 86-755-29358816

: info@szsosen.com

: www.szsosen.com

Performance Curves:

Power Factor Vs. Output Power

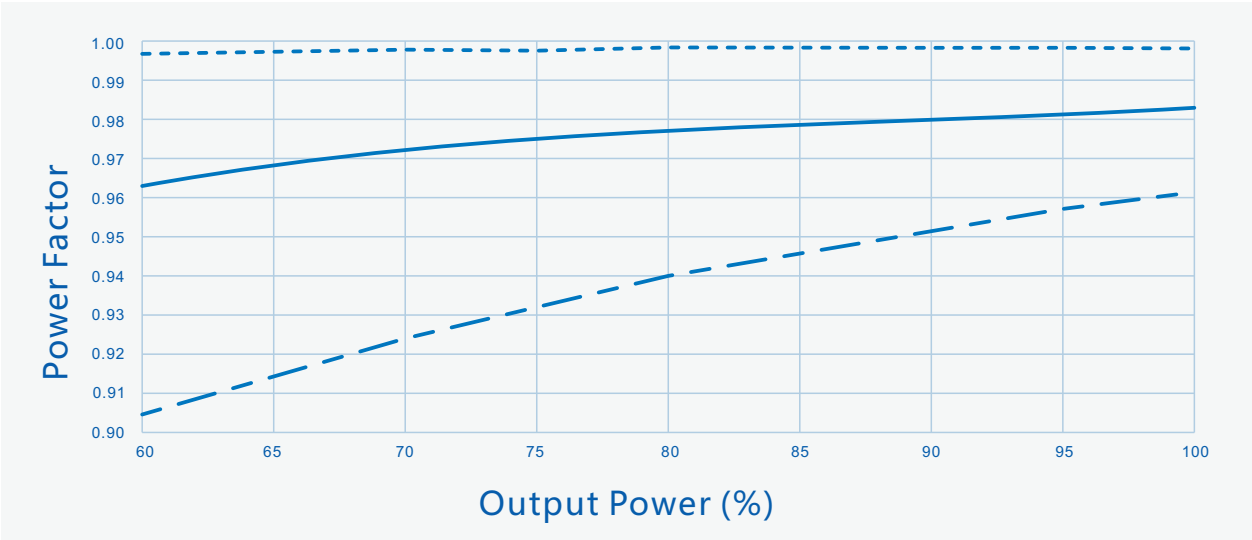

Vin=120Vac Vin=220Vac Vin=277Vac

THD Vs. Output Power

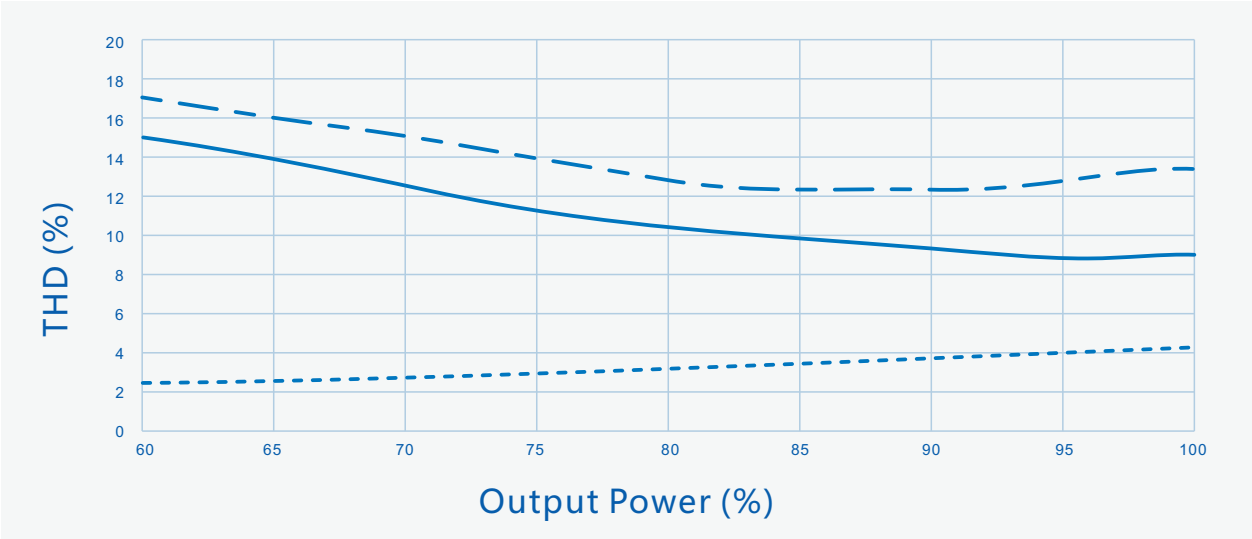

Vin=120Vac Vin=220Vac Vin=277Vac

SHENZHEN SOSEN
ELECTRONICS CO.,LTD

: A3 Building,Gonghe Fourth Industrial Area, Shajing Street, Bao'an District, Shenzhen, China 518104

: 86-755-29358800

: 86-755-29358816

: info@szsosen.com

: www.szsosen.com

Performance Curves:

Output power Vs. Input Voltage (Ta Max.60℃)

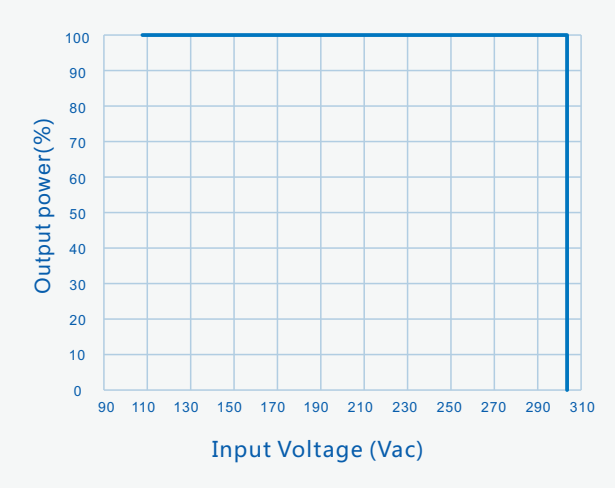

Output power Vs. Case Temperature

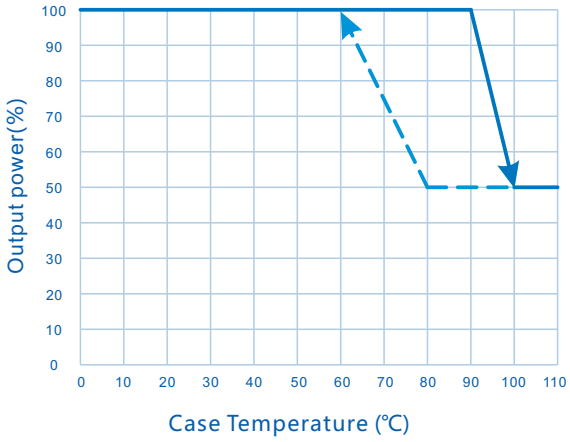

Output Power Vs. Dimming

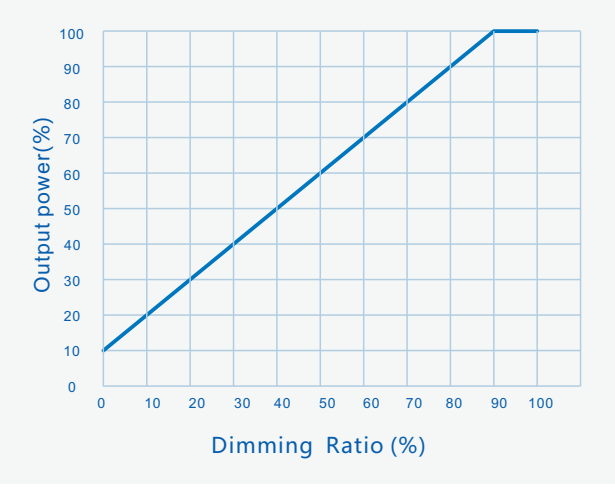

Lifetime Vs. Case Temperature

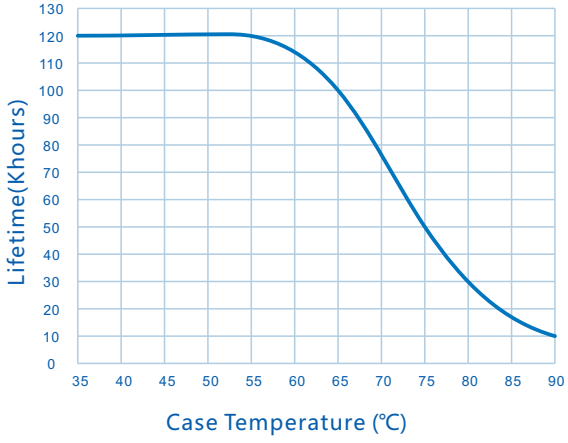

SHENZHEN SOSEN
ELECTRONICS CO.,LTD

: A3 Building,Gonghe Fourth Industrial Area, Shajing Street, Bao'an District, Shenzhen, China 518104

: 86-755-29358800

: 86-755-29358816

: info@szsosen.com

: www.szsosen.com

Performance Curves:

No load voltage VS. Output current

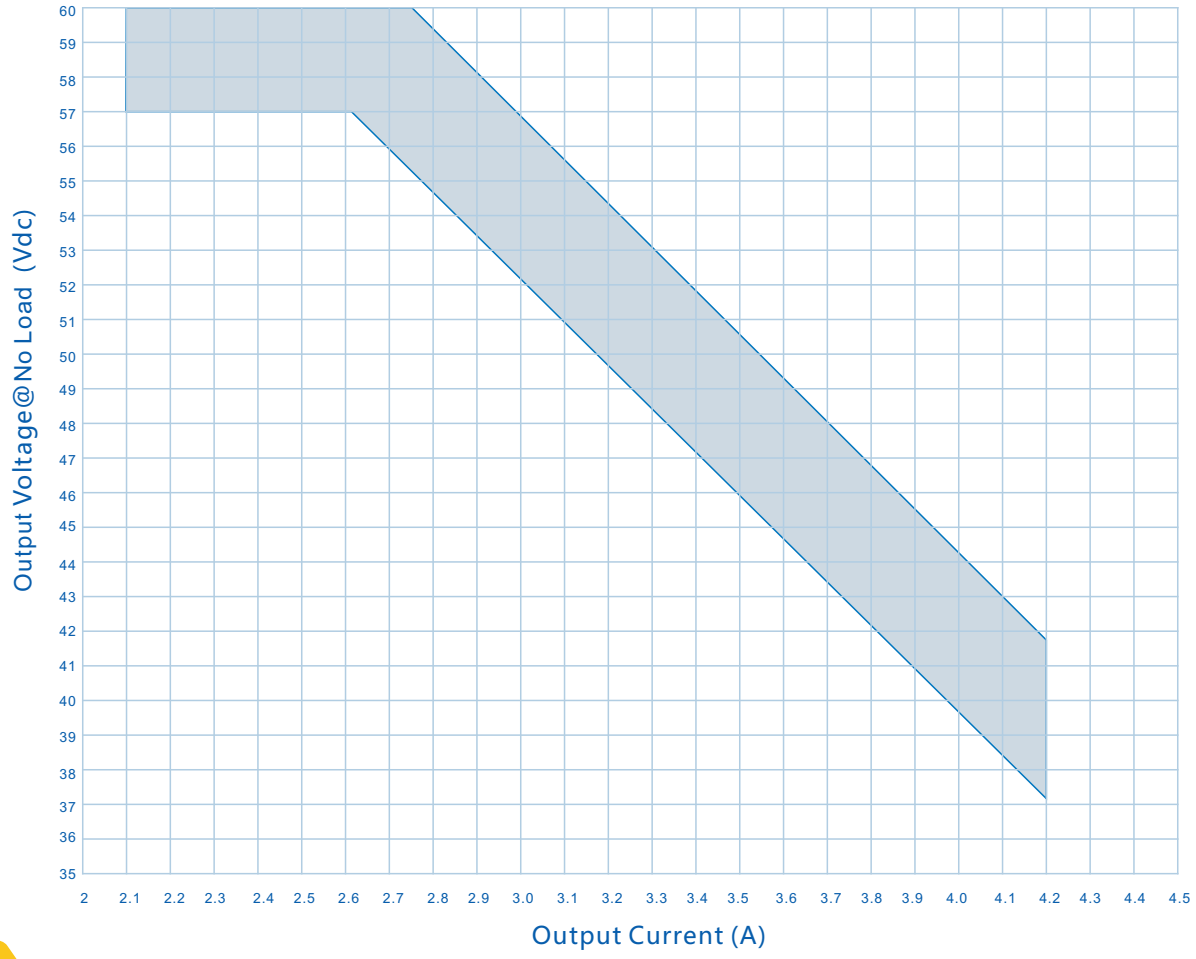

Warning:

Operation methods for adjusting output power:
Method 1: First adjusting the potentiometer to the minimum by rotating counterclockwise, then fine-tune the potentiometer to the specified power by rotating clockwise. If the specified power is exceeded during the adjustment process and the power is reduced from high value. Please adjusting the potentiometer to the minimum position and readjust it.
Method 2: First adjusting the potentiometer to the minimum position by rotating counterclockwise, then adjusting the potentiometer slowly by rotating clockwise and confirm whether driver's output current's corresponding no load voltage is in the shadow of upper drawings. If not, pls adjusting the potentiometer to the minimum position and readjust it.

SHENZHEN SOSEN
ELECTRONICS CO.,LTD

: A3 Building,Gonghe Fourth Industrial Area, Shajing Street, Bao'an District, Shenzhen, China 518104

: 86-755-29358800

: 86-755-29358816

: info@szsosen.com

: www.szsosen.com

Mechanical characteristics(Unit: mm)

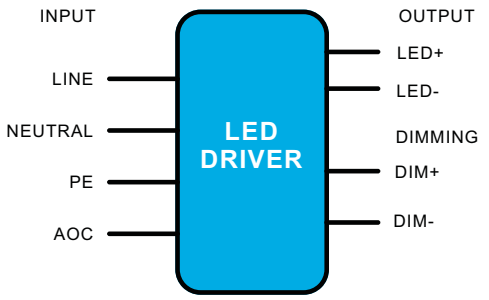

AC Input Cable(Lead Length outside enclosure 300±10mm):

UL model: SJTW,3*0.824mm^2,O.D: 7.8mm,Black:L,White:N,Green:PE
Euro model: H05RN-F,3*1.0mm^2, ,O.D:7.4mm,Brown:L, Blue:N,Yellow/Green:PE

DC Output Cable(Lead Length outside enclosure 300±10mm):

UL model: SJTW,2*0.824mm^2,O.D: 7.6mm,Red:LED+ , Black:LED-
Euro model: H05RN-R,2*1.0mm^2, O.D:7.0mm, Brown:V+, Blue:V-

DIM Cable(Lead Length outside enclosure 220±10mm):

UL/Euro model: UL 2733, 2*0.34mm^2 , O.D: 6.0mm , Purple : DIM+, Gray: DIM-

Name Description	Standard code	mm(In.)
PG Size	A	M12*1.5
Fixed Screw Diameter	4-B	Φ7.0(0.28)
Case Diameter	D	Φ151.0(5.95)
Height	H	71.5(2.82)
ADJ Hole	I	ADJ./IO
Ring Hole	Z	M12*1.75(G1/2)
Ring Fixed Hole	R	M4*0.7
Dim cable hole	T	Optional
Fixed Size	W	132.0(5.2)
Fixed Size	W1	132.0(5.2)

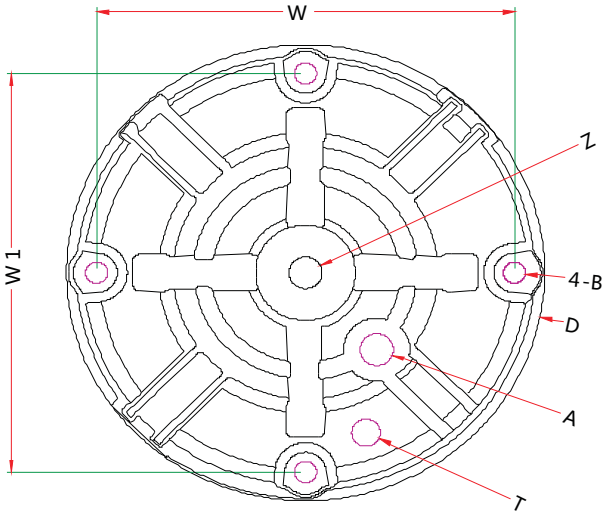

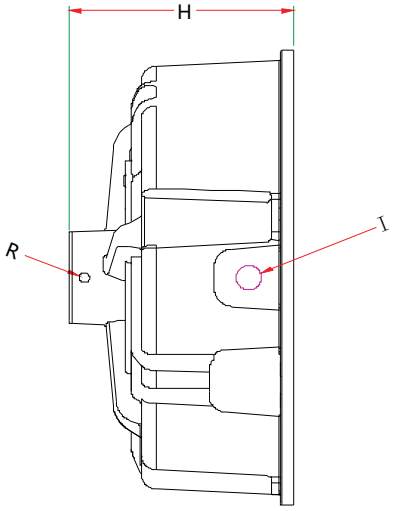

SHENZHEN SOSEN ELECTRONICS CO.,LTD
: A3 Building,Gonghe Fourth Industrial Area, Shajing Street, Bao'an District, Shenzhen, China 518104
: 86-755-29358800
: 86-755-29358816
: info@szsosen.com
: www.szsosen.com

SS-150CP Series LED Driver

Installation Tips

1. Highly recommended to seal the adjustable hole with silicon glue(#704 preferred) after adjustingthe driver's output current. Torsion with proper strength to avoid permanent damage to the potentiometer inside.
2. Dimming leads should be capped if not in use to avoid dimming circuit damage caused by external signals.

Package

- Outside carton dimension: L×W×H =500mm×390mm×170mm;
- 10PCS/Carton;
- Net weight/PC: 1.5kg;Gross weight/Carton: 16kg;
- Please refer to the product name, model number, manufacturer identification, quality inspection certifi-cate, manufacturing date Etc. on the package. and LED power supply instruction manual in the package.

Transportation

Packaging is designed suitable for transportation by trucks, vessels and flights. The products should be shielded from direct sunshine, loaded/unloaded with caution.

Storage

The product storage meets the standard of the GB 3873 - 83.

Products should be rechecked if stock for over 1 year before installation.

RoHS

Products comply with European directive 2011/65/EC.

SHENZHEN SOSEN
ELECTRONICS CO.,LTD

: A3 Building,Gonghe Fourth Industrial Area, Shajing Street, Bao'an District, Shenzhen, China 518104

: 86-755-29358800

: 86-755-29358816

: info@szsosen.com

: www.szsosen.com

REVISION HISTORY

Version	Description of Change	Changed Date	Remark
V00	Original release	2018/10/18	

SHENZHEN SOSEN
ELECTRONICS CO.,LTD

: A3 Building,Gonghe Fourth Industrial Area, Shajing Street, Bao'an District, Shenzhen, China 518104

: 86-755-29358800

: 86-755-29358816

: info@szsosen.com

: www.szsosen.com