ORBIT 240W

LED ROUND HIGHBAY

4000K Colour Temperature

5 Year Warranty

IK10 Rated

IP65 Rated

- ✓ Excellent chip efficacy of 130lm/W
- ✓ 54,000+ hours life to L70
- ✓ IP65 and IK10 rated
- ✓ 2m Flex and Plug

CODE	CCT	BODY COLOUR	STOCKED
ORBIT240-840-90	4000K	Black	Yes
ORBIT240-860-90	6000K	Black	No
ORBIT240-840-90-W	4000K	White	No
ORBIT240-860-90-W	6000K	White	No

LIGHTING DATA

Light Source	High output SMD LED Chip
Lumen Output	31,200lm
Luminaire Efficacy	130lm/W
Lifetime @L70	>54,000hrs
CRI	≥80
SDCM	<5
Beam Angle	90°, 60° (indent)
UGR	28

DESIGN / CONSTRUCTION

Housing Material	Corrosion-resistant aluminium
Lens Material	Polycarbonate
Finish	Anti corrosion powder coating
Colour	Black or White
Mounting Options	Suspended, Surface
Weight	5.5kg

ELECTRICAL DATA

Power Source	Sosen IP65 Driver
System Wattage	240W
Mains Voltage	AC200-240V / 50-60 Hz
Power Factor (Typ)	0.98
THD (Typ)	7%
Driver Lifetime	100,000hrs (Tc≤65°C)
Protections	SCP, OTP, OVP, OPP
Surge Protection	L/N-PE: 4kV, L-N: 4kV
Connection	2m 3 core cable with plug
Dimming Options	DALI, 1-10V (indent)

TECHNICAL DATA

IP Rating	IP65
IK Rating	IK10
Operating Temp	-30° to +45°C
Protection Class	Class 1
Certifications	SAA
Warranty	5 Year product replacement

ORBIT

TECHNICAL DETAILS

EVOLVE LIGHTING

IMAGES

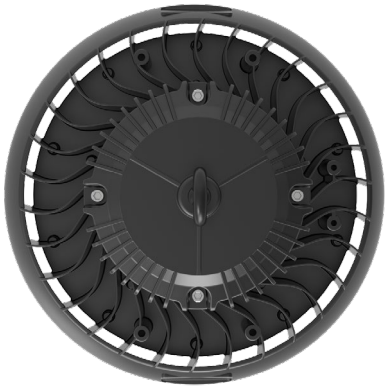

PHOTOMETRIC DIAGRAMS

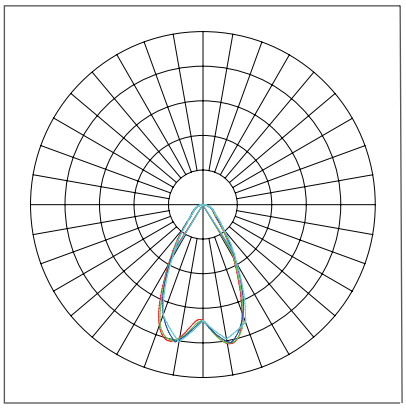

60°

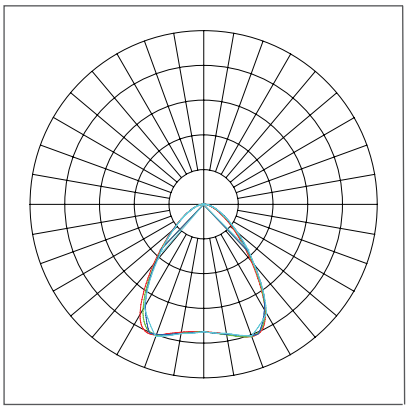

90°

DIMENSIONS

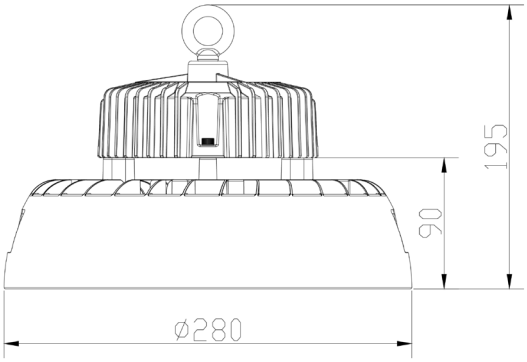

100W - 150W

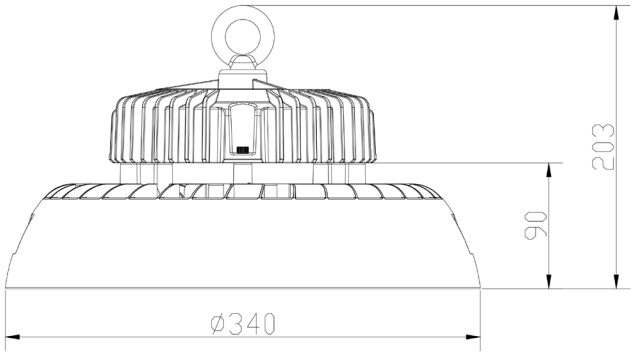

200W - 240W