SENTRY TYPE II
CLAMP POLE MOUNT

EVOLVE LIGHTING

HIGH PERFORMANCE AREA LIGHT

160lm/W System Efficacy

>102,000hrs @ L70

5 Year Warranty

IP65 Rated

- ✓ Modern smooth design
- ✓ Ultra efficient system efficacy of up to 160lm/W
- ✓ High quality Lumileds LED chips
- ✓ Long lasting, >102,000 hours life to L70
- ✓ Self cleaning design
- ✓ Internal glare shields available
- ✓ Dark Sky friendly (at 3000K, 2200K)
- ✓ Interpon polyester coating for excellent weatherability

Distribution:

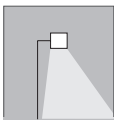

CODE	POWER	OUTPUT	EFFICACY
SEN-100-740-B-II-CPM	100W	13,951lm	139lm/W
SEN-70-740-B-II-CPM	70W	10,279lm	145lm/W
SEN-50-740-B-II-CPM	50W	6,911lm	134lm/W
SEN-30-740-B-II-CPM	30W	4,489lm	143lm/W

LIGHTING DATA

Light Source	Lumileds LED Chip
Lifetime @L70	>102,000hrs
CCT	4000K, 3000K (2200K, 5000K available on request)
CRI	>70 (>80 available on request)
SDCM	<3
Beam Angle	Type II

TECHNICAL DATA

IP Rating	IP65
IK Rating	IK09
Salt Spray Test	1000hrs
Operating Temp	-20° to +45°C
Protection Class	Class 1
Certifications	SAA, CE
Warranty	5 Year product replacement

DESIGN / CONSTRUCTION

Body Material	Aluminium
Optics Material	PMMA
Lens Material	Toughened glass
Coatings	Pure Epoxy Primer Interpon Polyester D1010
Colour	Graphite black (RAL9011)
Weight	5.5kg
EPA	0.036m2
Mounting	clamp pole mount

ELECTRICAL DATA

Power Supply	Inventronics Driver
Input Voltage	AC200-240V / 50-60 Hz
Power Factor (Typ)	≥0.95
THD (Typ)	<10%
Surge Protection	DM 6kV, CM 10kV
Protections	SCP, OTP, OVP, OCP
Driver Lifetime	100,000hrs
Connection	1.5m, 3 core cable

SENTRY TYPE II
CLAMP POLE MOUNT

TECHNICAL DETAILS

EVOLVE LIGHTING

PHOTOMETRIC DIAGRAMS

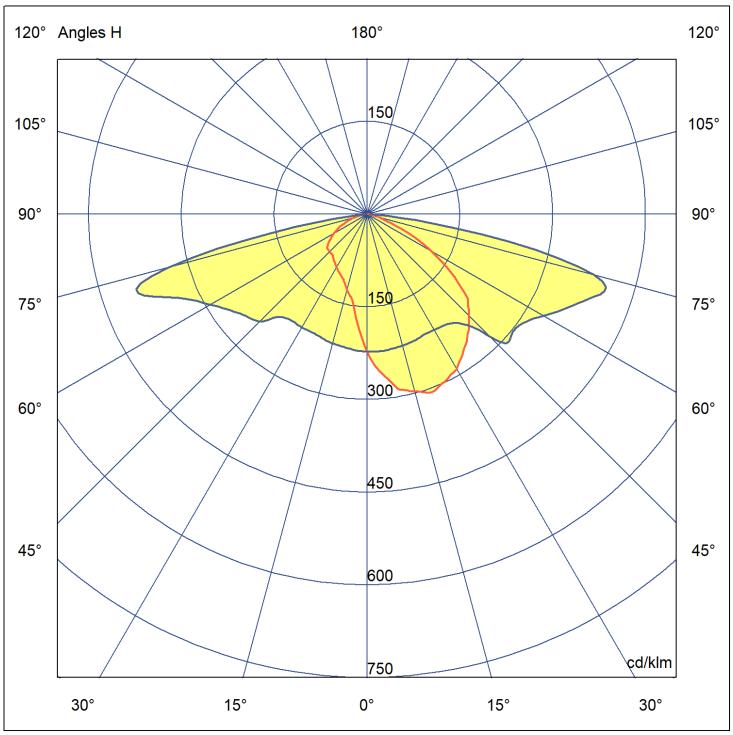

IMAGES

SENTRY TYPE II CLAMP POLE MOUNT

TECHNICAL DETAILS
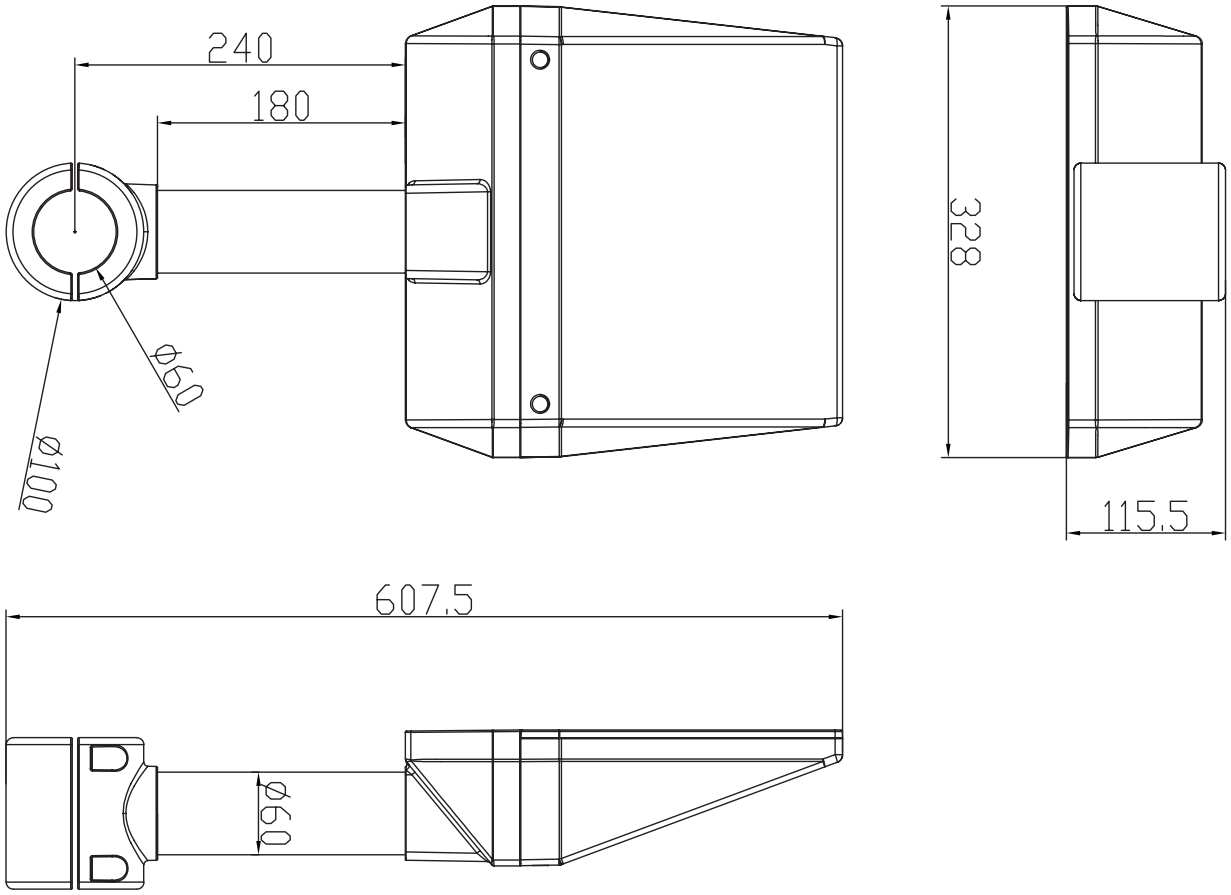
DIMENSIONS