CADET

FOUNDATION SERIES FLOODLIGHT

3K/4K/5K CCT Switch

>102,000hrs @ L70

IP66 Rating

5 Year Warranty

180lm/W Efficacy

- ✓ High output up to 38,000lm @ 200W
- ✓ Long >102,000 hours life @L70
- ✓ Ultra high efficacy of up to 180lm/W @ 4000K
- ✓ Asymmetric distribution for excellent light control
- ✓ Flexible with Wattage Select & 3CCT Selectable
- ✓ 1000 hours salt spray resistance
- ✓ Mounting accessories available
- ✓ 400W Metal halide replacement at 130W
- ✓ Electroplated bracket for excellent corrosion resistance

CODE	DEFAULT POWER/ LUMEN OUTPUT*	SELECTABLE WATTAGES	DIMENSIONS	WEIGHT
CAD-200-7345-G-AW	160W / 29,163lm	120W/160W/200W	466x332x67mm	5.0kg
CAD-130-7345-G-AW	130W / 23,000lm	90W/110W/130W	393x276x62mm	3.4kg
CAD-90-7345-G-AW	90W / 17,000lm	60W/75W/90W	333x264x58mm	2.4kg
CAD-50-7345-G-AW	50W / 9,000lm	30W/40W/50W	283x191x51mm	1.5kg

* wattage set out of the factory, see chart on page 2 for full list of wattages and outputs

LIGHTING DATA

Light Source	SMD LED
Lifetime @L70 B10	>102,000hrs
Luminaire Efficacy	160-180lm/W
CCT	Selectable 3000K/4000K/5000K
CRI	>70
SDCM	<5
Beam Angle	Asymmetric wide
Optimal Tilt Angle	30°

ELECTRICAL DATA

Mains Voltage	100-277VAC / 50-60 Hz
Power Factor (Typ)	0.97
THD	<10%
Inrush Current	See page 2
Driver Lifetime	100,000hrs
Surge protection	CM: 6kV, DM: 6kV
Protections:	SCP/OTP/OVP

DESIGN / CONSTRUCTION

Body Material	Aluminium
Bracket Material	Electroplated steel
Optic Material	PMMA
Lens Material	Toughened glass
Colour	Grey

TECHNICAL DATA

IP Rating	IP66
IK Rating	IK08
Salt Spray Rating	1000hrs
Operating Temp	-20° to +45°C
Protection Class	Class 1
Certifications	SAA
Warranty	5 Year product replacement

CADET

FOUNDATION SERIES FLOODLIGHT

EVOLVE LIGHTING

CCT/WATTAGE/LUMEN OUTPUT CHART

CODE

	Colour Temp	Watt	Lumen	Watt	Lumen	Watt	Lumen
CAD-200-7345-G-AW	3000K	200W	33,067lm	160W	27,239lm	120W	20,418lm
	4000K	200W	38,000lm	160W (set)*	29,163lm	120W	21,708lm
	5000K	200W	35,535lm	160W	29,153lm	120W	21,814lm
CAD-130-7345-G-AW	3000K	130W	21,145lm	110W	18,186lm	90W	14,663lm
	4000K	130W (set)*	23,275lm	110W	19,756lm	90W	15,756lm
	5000K	130W	22,737lm	110W	19,535lm	90W	15,686lm
CAD-90-7345-G-AW	3000K	90W	15,438lm	75W	12,680lm	60W	10,674lm
	4000K	90W (set)*	17,000lm	75W	13,716lm	60W	11,390lm
	5000K	90W	16,229lm	75W	13,275lm	60W	11,181lm
CAD-50-7345-G-AW	3000K	50W	7,600lm	40W	6,200lm	30W	4,800lm
	4000K	50W (set)*	9,000lm	40W	7,000lm	30W	5,310lm
	5000K	50W	8,150lm	40W	6,640lm	30W	5,100lm

* The product will come set to this wattage and CCT out of the factory

PHOTOMETRIC DIAGRAMS

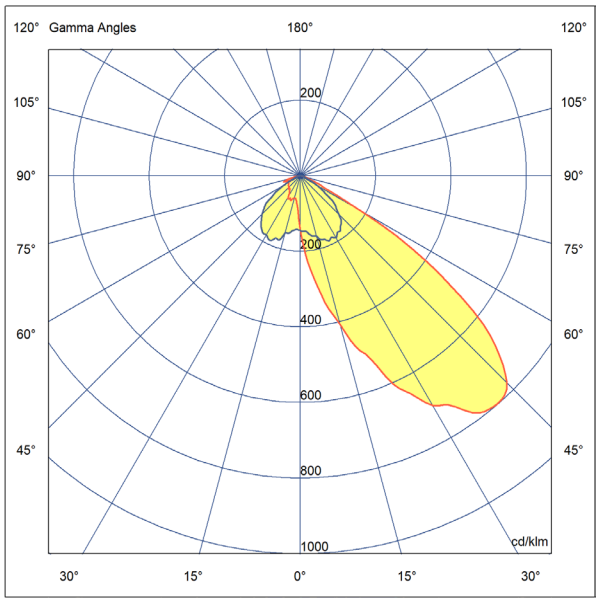

DRIVER SETTINGS

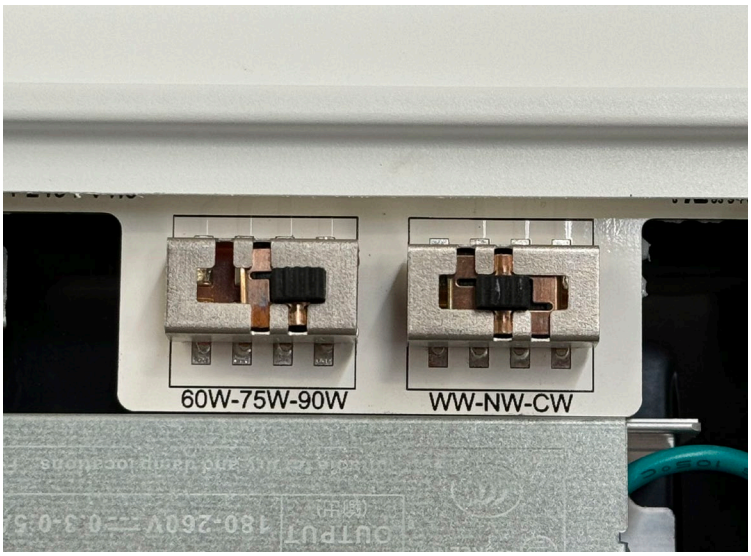

Use of CCT switch and dip switch only after mains off.

MAX CIRCUIT BREAKER LOADINGS

Code	Inrush Current	Time	Circuit breaker type	C10	C16	C20	B10	B16	B20
CAD-200-7345-G-AW	100 A	316µs	Max. No. of drivers	8	13	16	5	9	11
CAD-130-7345-G-AW	100 A	200µs		11	17	22	7	11	14
CAD-90-7345-G-AW	90A	160µs		14	22	28	8	13	17
CAD-50-7345-G-AW	15A	50µs		25	40	50	25	40	50

CADET

FOUNDATION SERIES FLOODLIGHT

EVOLVE LIGHTING

FULL CADET RANGE

50W

90W

130W

200W

REAR VIEW 200W

REAR VIEW 50W

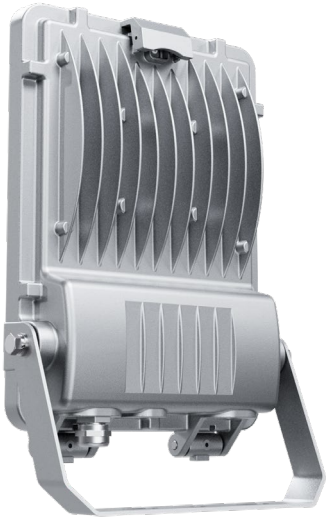

CADET

FOUNDATION SERIES FLOODLIGHT

EVOLVE LIGHTING

DIMENSIONS

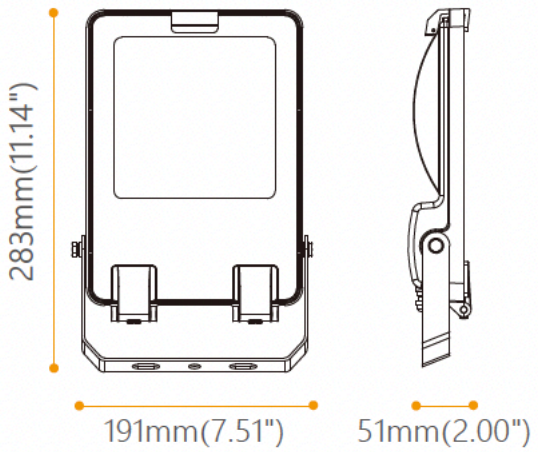

50W

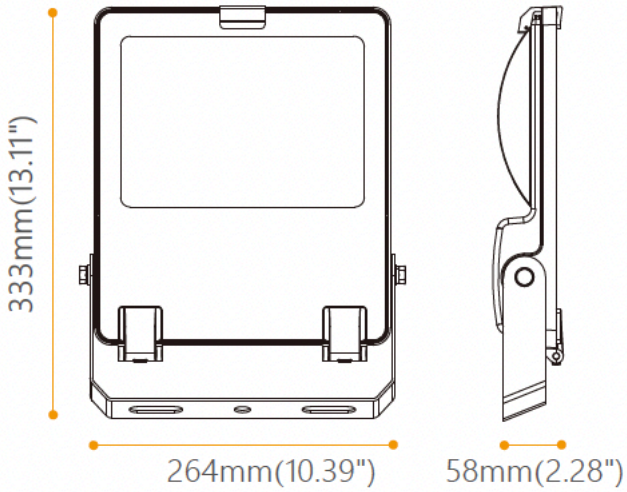

90W

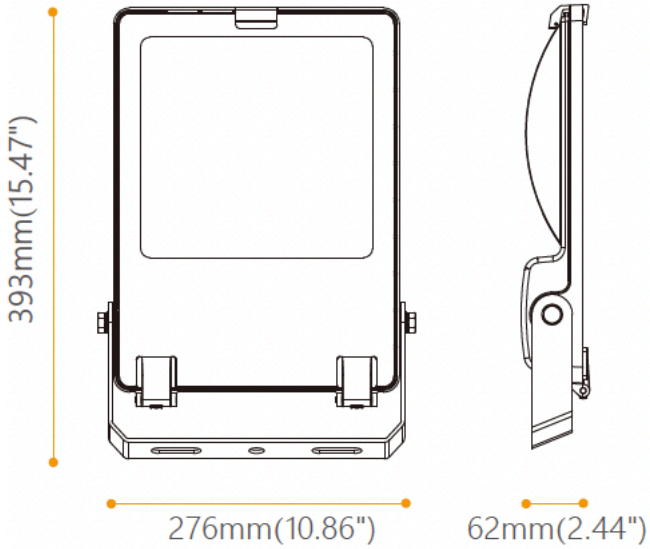

130W

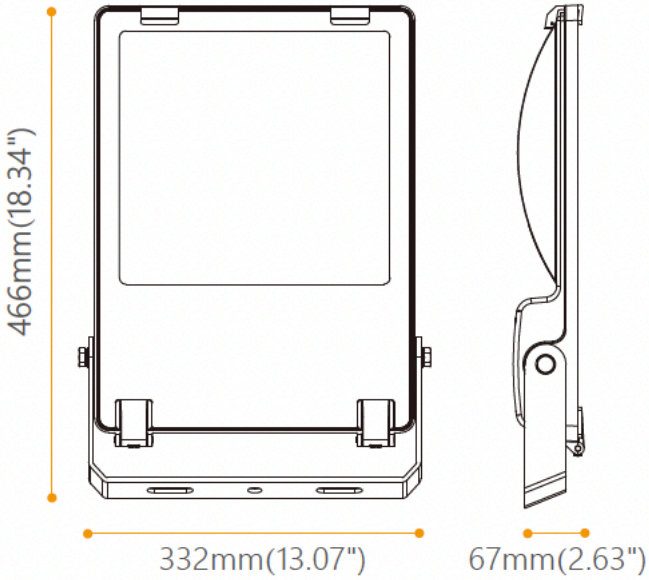

200W

CADET

FOUNDATION SERIES FLOODLIGHT

EVOLVE LIGHTING

MOUNTING OPTIONS

	Product: Pole Top Adaptor Code: CAD-PT-G - Adaptor size Ø60mm - Steel Plate Cold Commercial (SPCC) - Electroplated and then powder coated in grey
	Product: Pole Adaptor Code: CAD-PA-G - Suitable for D48-60mm pole - Steel Plate Cold Commercial (SPCC) - Electroplate and then powder coated in grey - Includes 2X M12*180mm hexagon screws and nuts
	Product: Wall Corner Adaptor Code: CAD-CM-G - Includes 6X M10*50mm expansion screws/anchoring - Steel Plate Cold Commercial (SPCC) - Electroplate and then powder coated in grey

P 0800 357 6311 E sales@evolve-lighting.co.nz